2STF2340
2STN2340

Low voltage fast-switching PNP power transistors

Features

- Very low collector-emitter saturation voltage
- High current gain characteristic
- Fast switching speed

Applications

- LED
- Motherboard & hard disk drive
- Mobile equipment
- DC-DC converter

Description

The devices are PNP transistors manufactured using new “PB-HDC” (power bipolar high density current) technology. The resulting transistor shows exceptional high gain performances coupled with very low saturation voltage.

The 2STF2340 complementary PNP is the 2STF1340.

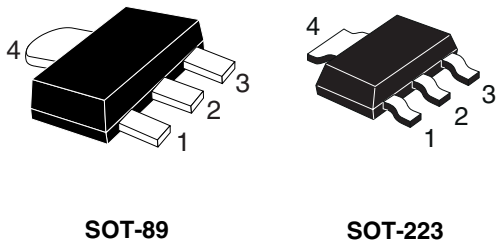

SOT-89 SOT-223

Figure 1. Internal schematic diagram

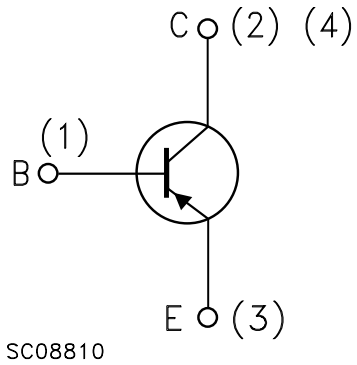

Table 1. Device summary

Order codes	Marking	Packages	Packaging
2STF2340	2340	SOT-89	Tape and reel
2STN2340	N2340	SOT-223	Tape and reel

1 Electrical ratings

Table 2. Absolute maximum rating

Symbol	Parameter	Value		Unit
		2STF2340	2STN2340	
		SOT-89	SOT-223	
V_{CES}	Collector-emitter voltage (V_{BE} = 0)	-40		V
V_{CEO}	Collector-emitter voltage (I_B = 0)	-40		V
V_{EBO}	Emitter-base voltage (I_C = 0)	-5		V
I_C	Collector current	-3		A
I_{CM}	Collector peak current (t_P < 5 ms)	-6		A
P_{TOT}	Total dissipation at T_{amb} = 25 °C	1.4	1.6	W
T_{STG}	Storage temperature	-65 to 150		°C
T_J	Max. operating junction temperature	150		°C

Table 3. Thermal data

Symbol	Parameter	SOT-89	SOT-223	Unit
R_{thJA}(1)	Thermal resistance junction-ambient max	89	78	°C/W

1. Device mounted on PCB area of 1 cm^2

2 Electrical characteristics

T_{case} = 25 °C unless otherwise specified

Table 4. Electrical characteristics

Symbol	Parameter	Test conditions	Min.	Typ.	Max.	Unit
I_{CBO}	Collector cut-off current (I_E = 0)	V_{CB} = - 40 V			-0.1	µA
I_{EBO}	Emitter cut-off current (I_C = 0)	V_{EB} = - 5 V			-0.1	µA
$V_{(BR)CBO}$ (1)	Collector-base breakdown voltage (I_E = 0)	I_C = - 100 µA	-40			V
$V_{(BR)CEO}$ (1)	Collector-emitter breakdown voltage (I_B = 0)	I_C = - 10 mA	-40			V
$V_{(BR)EBO}$	Emitter-base breakdown voltage (I_C = 0)	I_E = - 100 µA	-5			V
$V_{CE(sat)}$ (1)	Collector-emitter saturation voltage	I_C = - 2 A I_B = - 100 mA I_C = - 3 A I_B = - 150 mA			-250 -350	mV mV
$V_{BE(sat)}$ (1)	Base-emitter saturation voltage	I_C = - 2 A I_B = - 100 mA			-1.2	V
h_{FE} (1)	DC current gain	I_C = - 0.1 A V_{CE} = - 2 V I_C = - 1 A V_{CE} = - 2 V I_C = - 3 A V_{CE} = - 2 V	100 180	 220	450	
f_t	Transition frequency	I_C = - 0.1 A V_{CE} = - 5 V f = 100 MHz	100			MHz
C_{CBO}	Collector-base capacitance (I_E = 0)	V_{CB} = - 10 V f = 1 MHz		50		pF
 t_{on} t_{off}	Resistive load Turn-on time Turn-off time	I_C = - 1.5 A V_{CC} = - 10 V $I_{B(on)}$ = - $I_{B(off)}$ = - 150 mA $V_{BB(off)}$ = 5 V		 80 450		 ns ns

1. Pulse test: pulse duration ≤ 300 µs, duty cycle ≤ 2 %

2.1 Electrical characteristics (curves)

Figure 2. Output characteristics

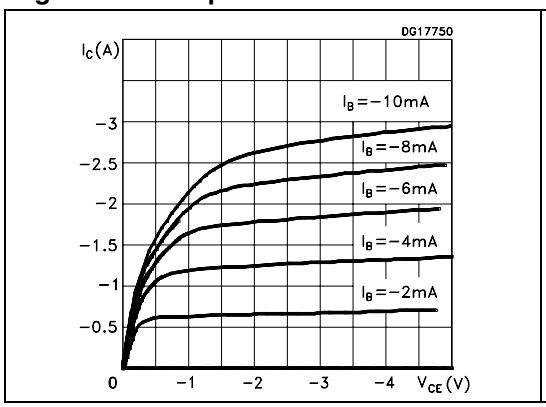

Figure 3. Derating curve

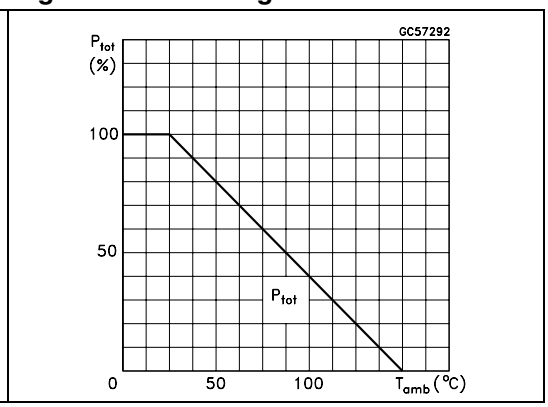

Figure 4. DC current gain (V_{CE} = - 2 V)

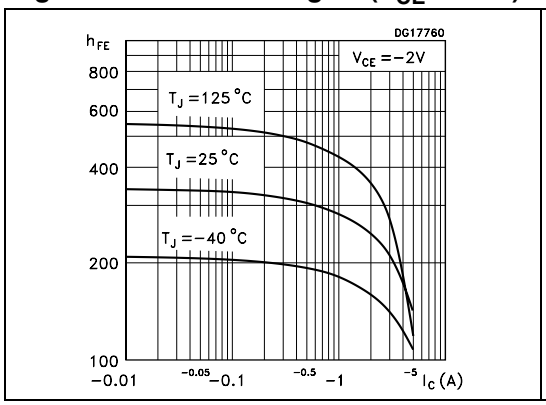

Figure 5. DC current gain (V_{CE} = - 5 V)

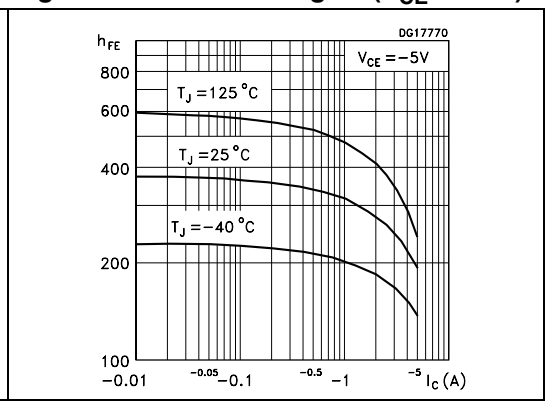

Figure 6. Collector-emitter saturation voltage

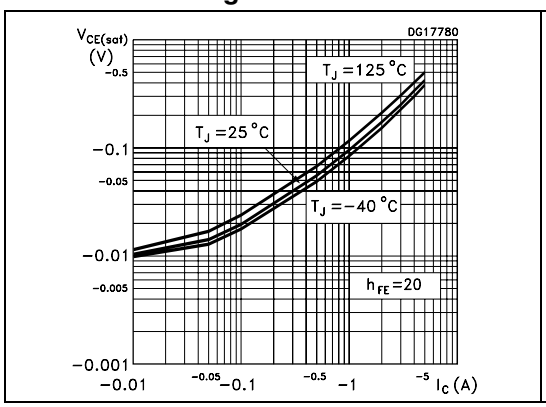

Figure 7. Base-emitter saturation voltage

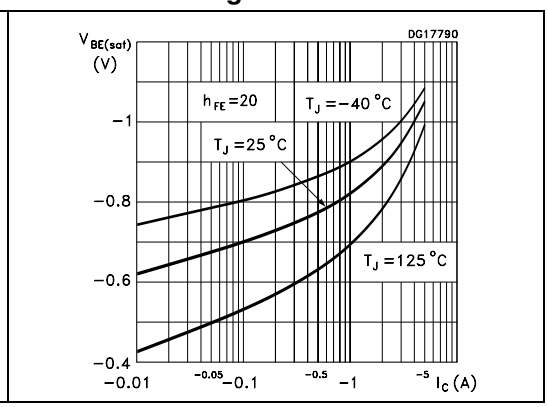

Figure 8. Resistive load switching on

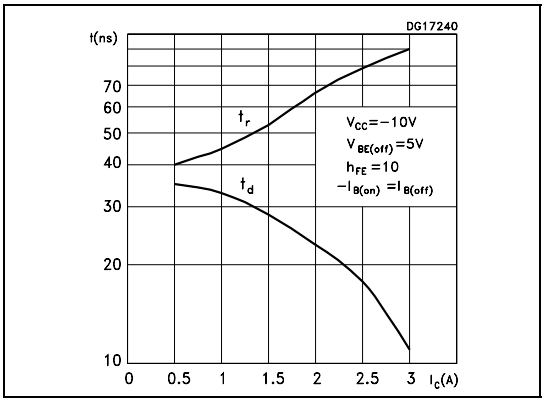

Figure 9. Resistive load switching off

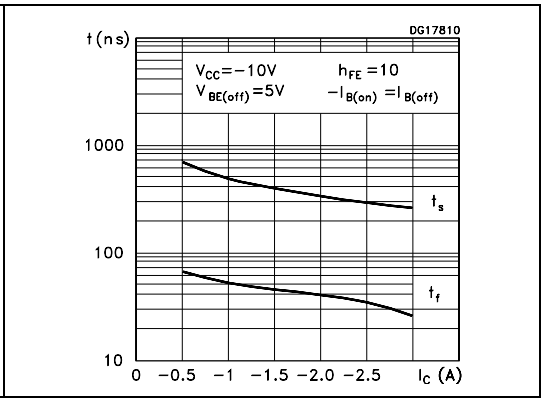

Figure 10. Capacitance curves

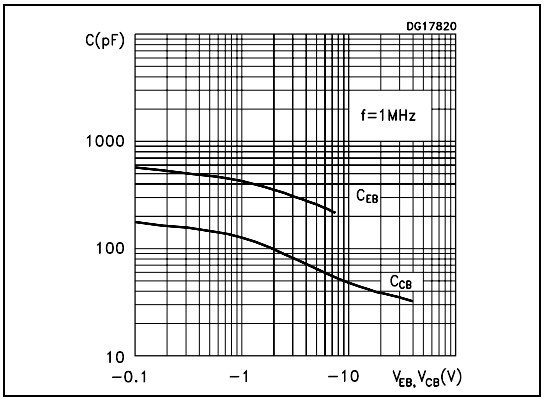

2.2 Test circuits

Figure 11. Resistive load switching test circuit

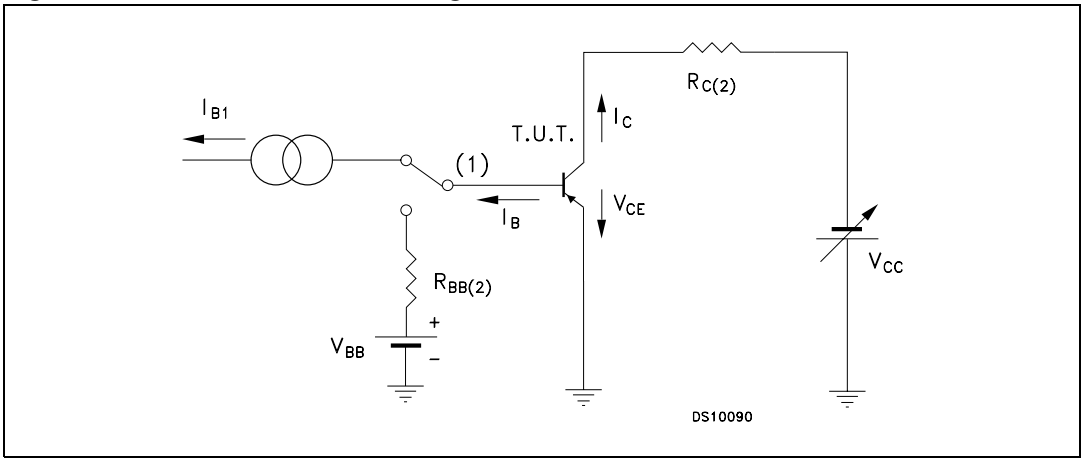

1. Fast electronic switch
2. Non-inductive resistor

3 Package mechanical data

In order to meet environmental requirements, ST offers these devices in different grades of ECOPACK® packages, depending on their level of environmental compliance. ECOPACK® specifications, grade definitions and product status are available at: *www.st.com*. ECOPACK® is an ST trademark.

SOT-89 mechanical data

Dim.	mm		
	Min.	Typ.	Max.
A	1.40		1.60
B	0.44		0.56
B1	0.36		0.48
C	0.35		0.44
C1	0.35		0.44
D	4.40		4.60
D1	1.62		1.83
E	2.29		2.60
e	1.42		1.57
e1	2.92		3.07
H	3.94		4.25
K	1°		8°
L	0.89		1.20
R		0.25	

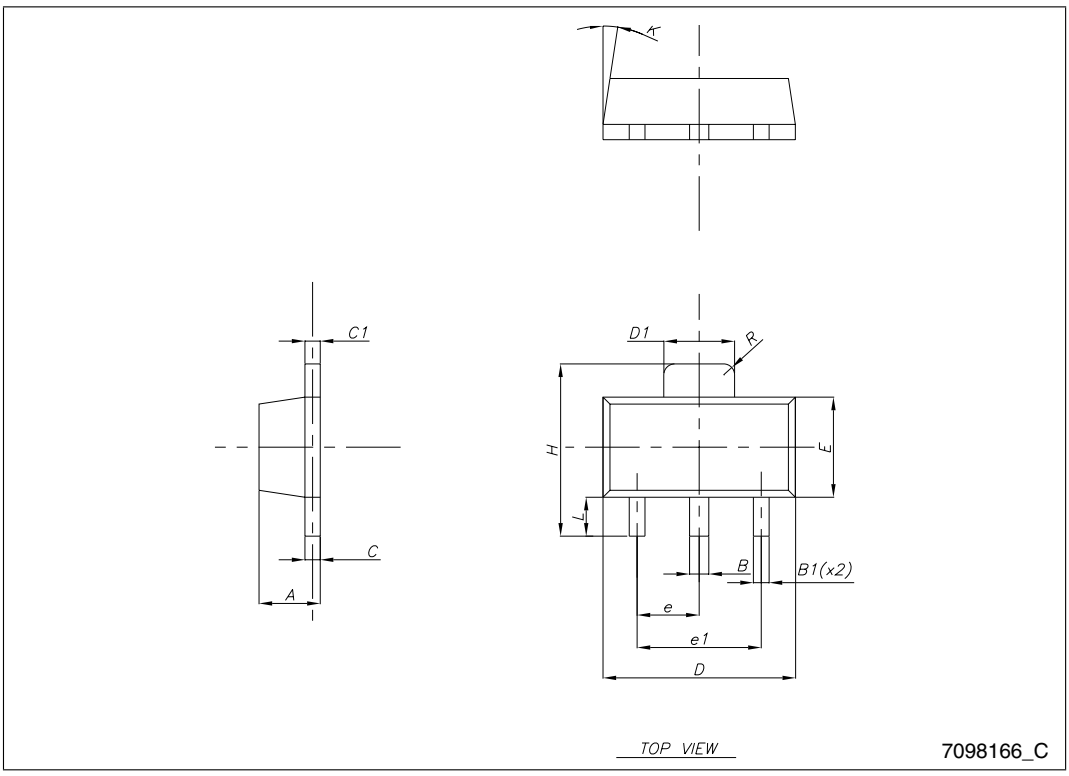

SOT-223 mechanical data

DIM.	mm.		
	min.	typ	max.
A			1.80
A1	0.02		0.1
B	0.60	0.70	0.85
B1	2.90	3.00	3.15
c	0.24	0.26	0.35
D	6.30	6.50	6.70
e		2.30	
e1		4.60	
E	3.30	3.50	3.70
H	6.70	7.00	7.30
V			10 ^{o}

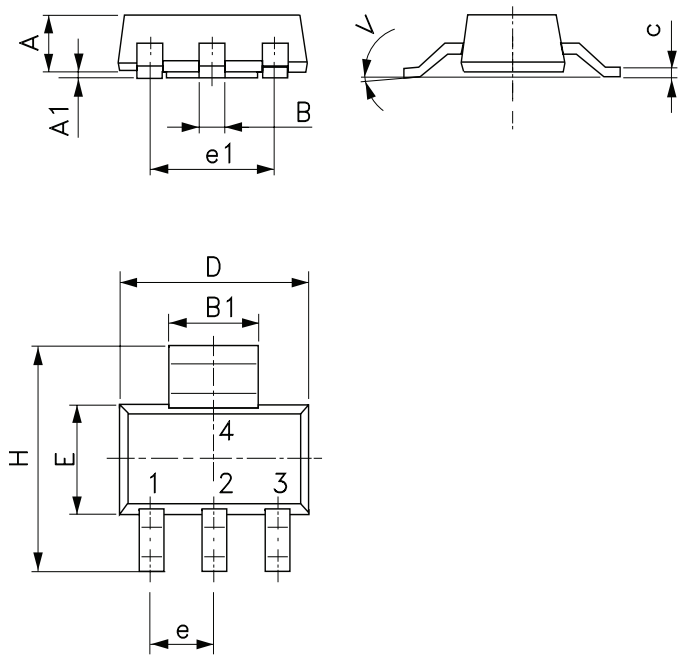

4 Revision history

Table 5. Document revision history

Date	Revision	Changes
04-Dec-2007	1	Initial release.
19-Oct-2009	2	Inserted 2STN2340 in SOT-223 package.

Please Read Carefully:

Information in this document is provided solely in connection with ST products. STMicroelectronics NV and its subsidiaries (“ST”) reserve the right to make changes, corrections, modifications or improvements, to this document, and the products and services described herein at any time, without notice.

All ST products are sold pursuant to ST’s terms and conditions of sale.

Purchasers are solely responsible for the choice, selection and use of the ST products and services described herein, and ST assumes no liability whatsoever relating to the choice, selection or use of the ST products and services described herein.

No license, express or implied, by estoppel or otherwise, to any intellectual property rights is granted under this document. If any part of this document refers to any third party products or services it shall not be deemed a license grant by ST for the use of such third party products or services, or any intellectual property contained therein or considered as a warranty covering the use in any manner whatsoever of such third party products or services or any intellectual property contained therein.

UNLESS OTHERWISE SET FORTH IN ST’S TERMS AND CONDITIONS OF SALE ST DISCLAIMS ANY EXPRESS OR IMPLIED WARRANTY WITH RESPECT TO THE USE AND/OR SALE OF ST PRODUCTS INCLUDING WITHOUT LIMITATION IMPLIED WARRANTIES OF MERCHANTABILITY, FITNESS FOR A PARTICULAR PURPOSE (AND THEIR EQUIVALENTS UNDER THE LAWS OF ANY JURISDICTION), OR INFRINGEMENT OF ANY PATENT, COPYRIGHT OR OTHER INTELLECTUAL PROPERTY RIGHT.

UNLESS EXPRESSLY APPROVED IN WRITING BY AN AUTHORIZED ST REPRESENTATIVE, ST PRODUCTS ARE NOT RECOMMENDED, AUTHORIZED OR WARRANTED FOR USE IN MILITARY, AIR CRAFT, SPACE, LIFE SAVING, OR LIFE SUSTAINING APPLICATIONS, NOR IN PRODUCTS OR SYSTEMS WHERE FAILURE OR MALFUNCTION MAY RESULT IN PERSONAL INJURY, DEATH, OR SEVERE PROPERTY OR ENVIRONMENTAL DAMAGE. ST PRODUCTS WHICH ARE NOT SPECIFIED AS "AUTOMOTIVE GRADE" MAY ONLY BE USED IN AUTOMOTIVE APPLICATIONS AT USER’S OWN RISK.

Resale of ST products with provisions different from the statements and/or technical features set forth in this document shall immediately void any warranty granted by ST for the ST product or service described herein and shall not create or extend in any manner whatsoever, any liability of ST.

ST and the ST logo are trademarks or registered trademarks of ST in various countries.

Information in this document supersedes and replaces all information previously supplied.

The ST logo is a registered trademark of STMicroelectronics. All other names are the property of their respective owners.

© 2009 STMicroelectronics - All rights reserved

STMicroelectronics group of companies

Australia - Belgium - Brazil - Canada - China - Czech Republic - Finland - France - Germany - Hong Kong - India - Israel - Italy - Japan - Malaysia - Malta - Morocco - Philippines - Singapore - Spain - Sweden - Switzerland - United Kingdom - United States of America

www.st.com